NAMA PEMILIK PROYEK : **PT PERTAMINA EP**

NAMA PROYEK : **JASA PEMBANGUNAN FASILITAS PRODUKSI STASIUN PENGUMPUL (SP) TANJUNG MIRING BARAT & KARANGAN TIMUR**

LOKASI : **SP TANJUNG MIRING BARAT & KARANGAN TIMUR - FIELD LIMAU**

NO. KONTRAK : **SA02035383B**

REV.	TGL.	DESKRIPSI	DISIAPKAN	DIPERIKSA	DISETUJUI	DIPERIKSA	DISETUJUI
A	30/12/2025	Issued For Review	BRS	AS	RTN		
			PT. PROSYMPAC OIL & GAS			PT. PERTAMINA EP	

TABEL REVISI

Rev.	Tanggal	Deskripsi

COMMENT RESPONSE SHEET

No.	Page	Company's Comment	Contractor's Response	Remarks

DAFTAR ISI

TABEL REVISI 2
COMMENT RESPONSE SHEET 3
DAFTAR ISI 4
1. GENERAL 5
1.1 Latar Belakang 5
1.2 Tujuan 7
1.3 Ruang Lingkup 7
1.4 Istilah 7
2. KODE, STANDAR, DAN REFERENSI 8
3. Daftar Singkatan 8
LAMPIRAN (MECHANICAL DATASHEET) 10

1. GENERAL

1.1 Latar Belakang

Struktur Tanjung Miring Barat (TMB) terletak di Kabupaten Muara Enim dan Kota Prabumulih, sekitar 20 kilometer di sebelah tenggara Kota Prabumulih, dengan luas daerah sekitar 8 km². Struktur Karangan (KRG) terletak di Kabupaten Muara Enim dan Kota Prabumulih, sekitar 15 kilometer di sebelah selatan Kota Prabumulih, dengan luas daerah sekitar 45 km².

ID	Easting (Meter)	Northing (Meter)	Elevation (Meter)	Feature Code
PN-1531	424962,745	967376,210	10,414	
PM-8593	425000,093	907528,777	19,046	

Gambar 1. Lokasi Rencana SP Tanjung Miring Barat - Karangan Timur

Lapangan Tanjung Miring Barat telah diproduksi sejak tahun 1938 dan terus beroperasi hingga tahun 2003 dengan produksi terakhir dari sumur TMB-11. Sejak dinonaktifkannya lapangan ini, fasilitas produksi yang terdiri dari flowline, stasiun pengumpul, serta jalur pengiriman pipa minyak ke custody transfer (PPP Prabumulih) sudah tidak layak operasi. Apabila akan dilakukan pengembangan lapangan, diperlukan pembangunan fasilitas produksi baru yang dapat menampung produksi hidrokarbon dari lapangan Tanjung Miring Baral serta memprosesnya agar sesuai dengan spesifikasi yang dipersyaratkan di titik serah. Saat ini status SP TMB adalah idle atau tidak beroperasi, sehingga produksi sumuran menggunakan Tank On-Site (TOS) dan dikirim secara gross ke SP-II TMT menggunakan trucking. Dikarenakan tidak adanya line gas ke sumur-sumur struktur TMB, supply Listrik untuk pumping unit menggunakan solar (diesel engine). Lapangan Karangan Timur hanya diproduksikan dari 2 sumur yaitu KRG-9 dan KRG-10 beroperasi mulai tahun 1984, dimana kondisi eksisting jalur pengiriman minyak dari sumur menggunakan trucking. Apabila akan dilakukan

pengembangan lapangan, diperlukan pembangunan fasilitas produksi baru yang dapat menampung produksi hidrokarbon dari lapangan Tanjung Miring Barat serta memprosesnya agar sesuai dengan spesifikasi yang dipersyaratkan di titik serah.

Dalam rencana jangka panjang sebagai upaya peningkatan produksi, PT Pertamina EP berencana akan mengembangkan Lapangan Tanjung Miring Barat dan Karangan Timur melalui pengembangan fasilitas produksi dimana rencana kerja pengembangan fasilitas akan dibagi ke dalam dua fase.

Pada fase pertama, produksi dari pengembangan awal TMB -KRG Timur akan dikirimkan menuju fasilitas sewa Early Production Facility (EPF) untuk selanjutnya dikirimkan menuju SP-1 TLJ melalui trunkline baru. Pada fase ini lingkup fasilitas produksi yang akan dibangun adalah flow/ine dari sumuran, sewa EPF dan trunkline dari EPF sampai dengan SP-1 TLJ.

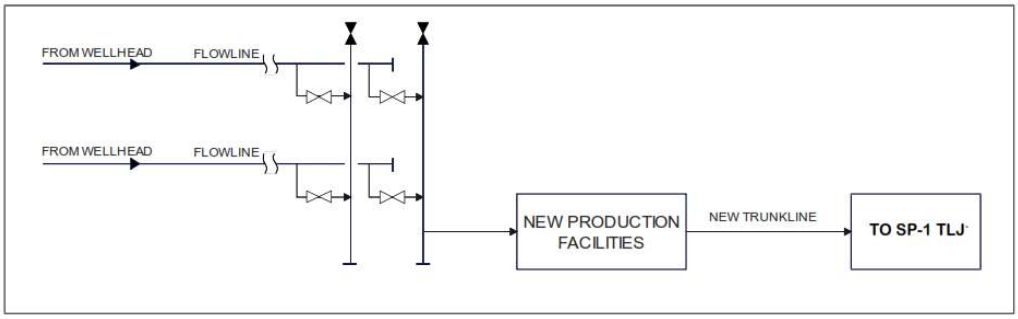

Gambar 2. Rencana Pola Operasi Fase

Pada fase kedua, akan dilakukan pengembangan tambahan dari sumur-sumur TMB-KRG Timur. Pada fase ini, lingkup fasilitas produksi yang akan dibangun meliputi pembangunan flowline dari sumuran pengembangan lanjutan serta peningkatan fasilitas SP TMB untuk menggantikan sewa EPF.

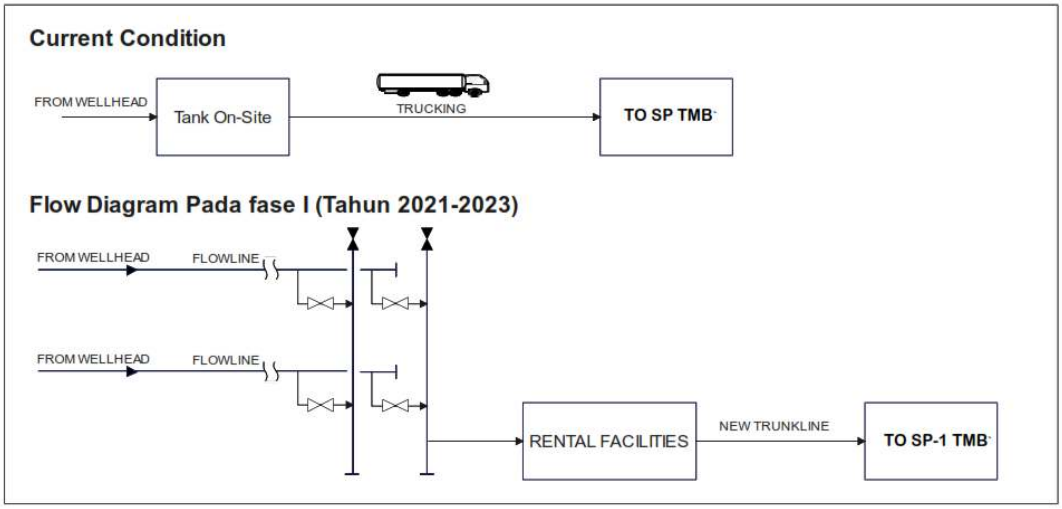

Gambar 3. Rencana Pola Operasi Fase

1.2 Tujuan

Dokumen ini menjelaskan dipersiapkan sebagai Mechanical Datasheet for Test Separator (V-003) sebagai bagian dari desain yang harus diikuti oieh KONTRAKTOR dan VENDOR untuk proyek Pembangunan Fasilitas Stasiun Pengumpul Lapangan Tanjung Miring Barat- Karangan Timur, Field Prabumulih.

1.3 Ruang Lingkup

Mechanical Datasheet ini meliputi ketentuan minimal dalam mengatur desain. material,pabrikasi, pemeriksaan, pengujian, persiapan, pengecatan dan persiapan untuk pengiriman Test Separator (V-003) untuk dipasang di proyek Pembangunan Fasilitas Stasiun Pengumpul Lapangan Tanjung Miring Barat — Karangan Timur, Field Prabumulih.

1.4 Istilah

Dokumen ini berisi istilah-istilah yang memiliki definisi tercantum sebagai berikut:

Perusahaan	Perusahaan yang dimaksud adalah PT PERTAMINA HULU ROKAN selaku Pemilik dan Pengguna Fasilitas akhir.
Kontraktor	Pihak yang dipilih oleh PERUSAHAAN sebagai pelaksana pekerjaan pengadaan dan konstruksi yang akan bertanggung jawab kepada PERUSAHAAN.
Vendor	Pihak lain yang akan menyediakan sesuatu untuk kebutuhan proyek, selain yang disediakan oleh PERUSAHAAN dan KONTRAKTOR, disebut VENDOR. Tanggung jawabnya langsung kepada KONTRAKTOR baik terhadap PO maupun bentuk perjanjian lain antara VENDOR dan

	KONTRAKTOR.
SKK MIGAS	Suatu badan dari Pemerintah Indonesia yang bertanggung jawab terhadap proses persetujuan dan izin untuk semua fasilitas di lingkungan minyak dan gas.
Perencana	Pihak yang dipilih oleh PERUSAHAAN sebagai pelaksana pekerjaan Jasa FEED Engineering Services. Dalam hal ini disebut PERENCANA, yang akan bertanggung jawab kepada PERUSAHAAN sebagaimana dirinci dalam kontrak, scope of work, atau work order.
Inspektor	Perwakilan dari PERUSAHAAN dan/atau seseorang yang ditunjuk oleh PERUSAHAAN, yang bertanggung jawab sebagai INSPEKTOR atas pekerjaan yang dilakukan oleh KONTRAKTOR.SINGKATAN

2. KODE, STANDAR, DAN REFERENSI

DOKUMEN PROYEK

1. TMBP-SP001-ME-DBS-D101 - Mechanical Design Basis
2. TMBP-SP001-PR-DST-D103 - PROCESS DATASHEET CLOSED DRAIN VESSEL V-007
3. TMBP-SP001-ME-SPE-D101 - SPECIFICATION FOR PRESSURE VESSEL (ASME)
4. TMBP-SP001-PR-PID-112 - PID CLOSED DRAIN SYSTEM

3. Daftar Singkatan

Beberapa singkatan yang paling umum digunakan tercantum dalam daftar berikut:

BOPD	*Barrel Oil Per Day*
BPD	*Barrel Per Day*
BWPD	*Barrel Water Per Day*
EOR	*Enhanced Oil Recovery*
FEED	*Front End Engineering Design*
KRG	*Karangan*
MMSCFD	*Million Standard Cubic Feet per Day*
NPS	*Nominal Pipe Size*
PB	*Production Battery*

PHR	*Pertamina Hulu Rokan*
PT	*Perseroan Terbatas*
SP	*Stasiun Pengumpul*
SCH	*Schedule*
TMB	*Tanjung Miring Barat*
TMT	*Tanjung Miring Timur*
WK	*Wilayah Kerja*

MECHANICAL DATASHEET FOR CLOSED DRAIN VESSEL (V-007)

Judul Proyek	Nomor Dokumen	Rev.	Date	Page
JASA PEMBANGUNAN FASILITAS PRODUKSI STASIUN PENGUMPUL (SP) TANJUNG MIRING BARAT & KARANGAN TIMUR	TMBP-SP001-ME-DST-D107	A	24-Dec-25	10 of 12

Tag No.	V-007	Client	PT. PERTAMINA EP
Service	CLOSED DRAIN VESSEL	Plant Location	SP TANJUNG MIRING
P & ID No.	TMBP-SP001-PR-PID-112	No. of Unit	1 (ONE)
Eq. Layout No.	TMBP-SP001-PI-PLP-D102		

REVISION

1	**OPERATING DATA**			
2	Fluid Content			**Liquid Hydrocarbon**
3	Special Service (Sour/Cyclic/Amine/Lethal)			**-**
4	Operating Temperature	(Min/Norm/Max)	°F	**187,00**
5	Operating Pressure	(Min/Norm/Max)	psig	**3,60**
6	Liquid	- Mass Flowrate	lb/hr	**15266,64**
7		- Density	lb/ft^3	**61,77**
8		- Viscosity	cP	**1,01**
9		- Capacity	BPD	**842,94**
10	Gas	- Mass Flowrate	lb/hr	**438**
11		- Density	lb/ft^3	**0,09**
12		- Viscocity	cP	**0,01**
13		- Capacity	mmscfd	**0,00139**
14				
15				
16				
17	**DESIGN DATA**			
18	Vessel Orientation			**Horizontal**
19	Code & Standard			**ASME Sec VIII Div 1 Latest Ed.**
20	ASME Stamp			**No**
21	Regulation			**MIGAS**
22	Design Pressure	(Int./Ext.)	psig	**50,0**
23	Design Temperature		°F	**237**
24	Minimum Design Metal Temperature		°F	**-20**
25	Diameter (I.D.)		ft (mm)	**4,5 (1371,6)**
26	Length (TL / TL)		ft (mm)	**15 (4572)**
27	Corrosion Allowance		ft (mm)	**0,118 (3)**
28	Cladding / Lining		ft (mm)	**-**
29				
30	Joint Efficiency	(Shell / Head)		**1.0 / 1.0**
31	Head Design Type (Left / Right)			**2:1 Ellipsoidal / 2:1 Ellipsoidal**
32	Thickness :			
33	Shell Thickness (Nominal) - **(Note 4)**		in (mm)	**0,315 (8)**
34	Head Thickness (Min. After Forming) - **(Note 4)**		in (mm)	**0,315 (8)**
35	MAWP - **(Note 4)**		psig	**60,00**
36				
37	Hydrotest Pressure		psig	**75,00**
38	Support Type			**Saddle**
39	Seismic Design			
40	Standard Code			**ASCE 7-16**
41	Risk Category			**III**
42	Site Class			**D**
43	Importance Factor (Ie)			**1,50**
44	Spectral Resp. Acc. at Short Period (Ss)		(g)	**0,0422**
45	Spectral Resp. Acc. at 1 Sec Period (S1)		(g)	**0,0627**
46	Wind Design			
47	Standard Code			**ASCE 7-10**
48	Design Wind Speed		mph	**64,44**
49	Exposure (E)			**C**
50	Importance Factor (I)			**1.25**
51	Insulation			**N/A**
52	Insulation Thickness		in	**N/A**
53	Fire Protection (by Others)			**N/A**
54	External Painting			**Yes, As per Spec [3]**
55	Internal Coating			**Yes, As per Spec [3]**

56	**MOMENT AND SHEAR FORCE AT BASE (AT OPERATING CONDITION)**		
57		**MOMENT (lbf-ft)**	**SHEAR (lbf)**
58	WIND	**VTA**	**VTA**
59	SEISMIC	**VTA**	**VTA**
60			

	CONSTRUCTION MATERIAL		
	PART		**MATERIAL SPECIFICATION**
	Shell		**SA-516 Gr. 70**
	Head		**SA-516 Gr. 70**
	Nozzle Neck (Pipe / Plate)		**SA-106 Gr.B / SA516 Gr .70**
	Nozzle Flange / Forged Flange		**SA-105**
	Fitting		**SA-234 WPB**
	Support :		
	Saddle / Wear Plate		**SA-36 / SA 516 Gr. 70**
	Web & Rib		**SA-36**
	Base Plate		**SA-36**
	Internal Parts	- Fixed	**SA-516 Gr. 70**
		- Removable	**SA-516 Gr. 70**
	External Attachment (Weld to Shell/Head)		**SA-106 Gr.B**
	Bolts/Nuts	- Internal	**SA 193 Gr. B8 M / SA 194 Gr. B8 M**
		- External **Note 7**	**ASTM A193Gr. B7/ASTM A 194 Gr. 2H (HDG)**
	Gaskets	- Internal	**N/A**
		- External **Note 8**	**GRAPHIT FILLER, SS304L SW W/ INNER OUTER RING**
	Reinforcement Pad		**SA 516 Gr. 70**
	Stiffener Ring		**SA 516 Gr. 70**
	Lifting Lug / Tailing Lug		**SA 516 Gr. 70**
	Name Plate / Bracket		**SA 240 TP316L/ SA 516 Gr.70**
	Earthing Lug		**SS316L**
	Anchor Bolt (by others)		**ASTM A193Gr. B7/ASTM A 194 Gr. 2H (HDG)**
	CONSTRUCTION		
	Platform & Ladder		**YES**
	Platform & Ladder Clip		**YES**
	Insulation Support Clip		**NO**
	Personnel Protection Clip		**NO**
	Fire Proofing Clip		**NO**
	Pipe Support Clip		**YES**
	Lifting Lug		**YES**
	Earthing Lug		**YES, MIN. OF 2 (TWO)**
	Manhole Davit		**YES**
	Internal Parts		
	- Vortex Breaker		**YES**
	- Extended Internal Pipe		**NO**
	- Ladder Rung		**YES**
	- Cathodic Protection		**YES (SACRIFICIAL ANODE)**
	INSPECTON & TESTING (AS PER CODE & SPECS.)		
	Non Destructive Test		
	Radiography		**100%**
	Ultrasonic		**As per Code & Spec**
	Magnetic Particle		**As per Code & Spec**
	Dye Penetrant		**As per Code & Spec**
	Positive Material Identification		**As per Code & Spec**
	Impact Test		**As per Code & Spec**
	Post Weld Heat Treatment (PWHT)		**As per Code & Spec**
	Certification		**MIGAS**
	PMI		**Yes (for Alloy and Stainless Steel)**
	Pneumatic Test for Reinforcement Pad		**Note 9**
	Hydrotest		**As per Code & Spec**

	ESTIMATED WEIGHTS (Note 4)		
	FABRICATION	lb	**6252 (VTA)**
	EMPTY	lb	**6252 (VTA)**
	OPERATING	lb	**19832 (VTA)**
	TESTING	lb	**28675 (VTA)**

61	**REFERENCE - PROJECT DOCUMENTS**	
62	[1] TMBP-SP001-PR-PID-112	PID CLOSED DRAIN SYSTEM
63	[2] TMBP-SP001-ME-SPE-D101	SPECIFICATION FOR PRESSURE VESSEL (ASME)
64	[3] TMBP-SP001-PI-SPE-D503	PIPING PAINTING & LETTERING SPECIFICATION
65	[4] TMBP-SP001-ME-DBS-D101	MECHANICAL DESIGN BASIS
66	[5] TMBP-SP001-CS-DBS-D101	CIVIL, STRUCTURE AND BUILDING DESIGN BASIS
67	[6] TMBP-SP001-PI-SPE-D501	PIPING MATERIAL SPECIFICATION
68	[7] TMBP-SP001-IN-DBS-D101	INSTRUMENT AND CONTROL SYSTEM DESIGN BASIS
69	[8] PEP-10-D0-SP-0001	SPECIFICATION FOR PRESSURE VESSEL DESIGN & FABRICATION
70	[9] PEP-10-D9-SP-0001	SPECIFICATION FOR VESSEL INTERNAL
71		
72		
73		
74		
75		
76		
77		
78		

Any controlled copies may be superseded. Refer to COMPANY Server for controlled version.

REVISION

NOZZLE SCHEDULE (Note 14)

Mark	Qty	Size (NPS)	Rating (Note 18)	Flange Type	SCH / Thk	Nozzle Proj. (in / mm)	Service	Remarks
N1	1	4	150#	WNRF	80	8 / 200	Feed Inlet	
N2	1	2	150#	WNRF	80	8 / 200	Liquid Outlet	C/W Vortex Breaker
N3	1	2	150#	WNRF	80	8 / 200	Pressure Indicator / Transmitter	
N4	1	2	150#	WNRF	80	8 / 200	Gas Outlet to Vent Stack	
N5 A/B	2	2	150#	WNRF	80	8 / 200	Level Indicator Transmitter	
N6	1	2	150#	WNRF	80	8 / 200	Pressure Gauge	
N7	1	2	150#	WNRF	80	8 / 200	Utility Connection	C/W Valve & Blind Flange
N8	1	2	150#	WNRF	80	8 / 200	For Maintanance	
N9	1	2	150#	WNRF	80	8 / 200	Open Drain	
N10	1	2	150#	WNRF	80	8 / 200	Temperature Transmitter	
N11 A/B	2	2	150#	WNRF	80	8 / 200	Level Gauge	
N12 A/B	2	2	150#	WNRF	80	8 / 200	Level Indicator Transmitter	
N13	1	2	150#	WNRF	80	8 / 200	Spare Nozzle	C/W Valve & Blind Flange
M1	1	24	150#	WNRF	13 mm	10 / 250	Manhole	(Note 25)
M2	1	24	150#	WNRF	13 mm	10 / 250	Manhole	(Note 25)

EQUIPMENT SKETCH (Note 10)

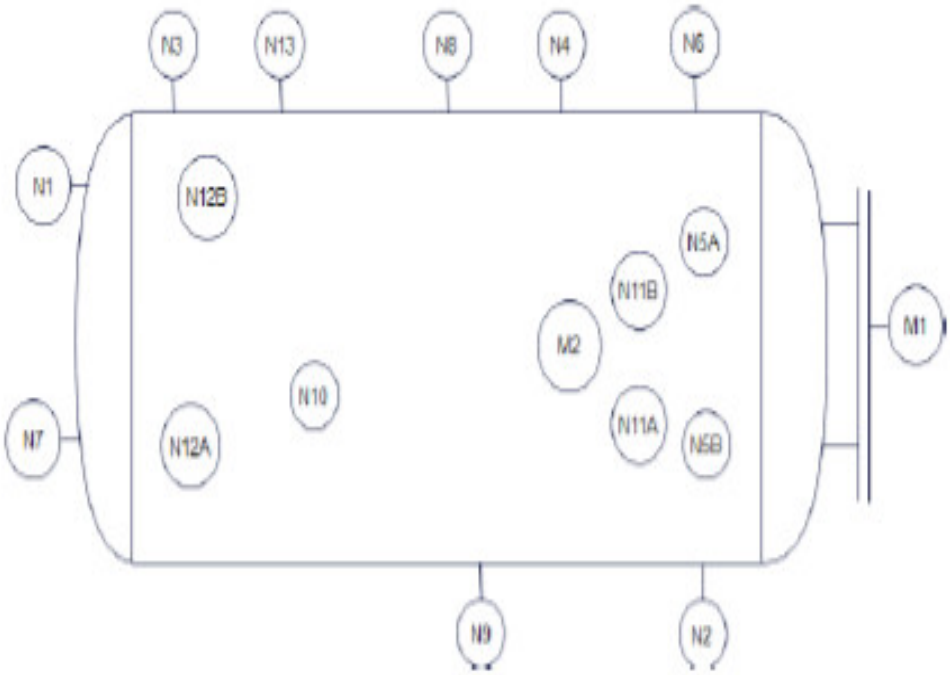

LIQUID LEVEL		
VESSEL (from Bottom Inner Surface)		
HLL	in	48
LLL	in	12
LLLL	in	6

REVISION

NOTES

1. All dimensions are in inch, unless otherwise noted.
2. This datasheet shall be read together with P&ID No.:TMBP-SP001-PR-PID-D101 and Specification for Pressure Vessel (ASME) : TMBP-SP001-ME-SPE-D101
3. The design life of equipment shall be minimum 20 years
4. All thickness shown in this mechanical data sheet shall be cosidered as a minimum after forming and rolling/machining. Thickness, weight, MAWP/MAP, test pressure and loads are indicated for estimation purpose only. Vessel Vendor shall be responsible for the full mechanical design and shall confirm all material chosen, thickness, weight, volume and loading.
5. MIGAS certificate is required. VENDOR is responsible to provide all required assistance and documentation to obtain MIGAS approval and certificate.
6. Certification shall include material certificate as per EN.10204 3.1 for pressure retaining parts and EN.10204 2.2 for non pressure parts.
7. External Bolts and Nuts shall be HDG coated, minimum thickness 35 micron.
8. Gasket shall be 0.175" thick, spiral wound, 304L SS Windings, Flexible graphite filler SS304L inner & outer ring, ASME B16.20
9. All reinforcing pads shall be pneumatically tested at gauge pressure of 25 psi.
10. Nozzle locations are indicative only. Vendor shall indicate the nozzle location for details.
11. All flange bolt hole shall be straddle to center line.
12. Flanges shall be in accordance with ASME B16.5 latest edition.
13. Gasket used in hydrostatic test should be replaced after testing.
14. VENDOR to calculate/specify thickness, nozzle reinforcement, lifting lugs, support, etc. including external nozzles locallized stress analysis as per WRC 107/537 & 297 Bulletin.
15. External Coating and Painting shall in accordance with TMBP-SP001-PI-SPE-D503, Specification for Piping Painting & Lettering
16. All external nozzles locallized stress analysis to be performed by VENDOR as per WRC 537 Bulletin. Nozzle flange ratings are based on process design condition only. Vendor shall accordingly increase the flange (if required), as per Code requirement, considering the minimum external loads requested by the project specifications.
17. Except for Instrument, utility, open drain & vent nozzle, All Nozzle shall be designed to withstand the Moment and Force in accordance with ANNEX VIII on PEP-10-D0-SP-0001. VENDOR shall make calculations in accordance with WRC 107/WRC 297 procedure. MAWP shall not be limited on the nozzle neck, reinforcement pad, and Flange.
18. VENDOR shall responsible to verify the Flange Rating required for the nozzle after reduced by equivalent pressure from moment and force in ANNEX VIII on PEP-10-D0-SP-0001, in accordance with ASME Interpretation BPV VIII-1-16-85. VENDOR shall inform during bidding stage whether it is required to increase the flange rating. If there is a change in the flange rating after the Purchase Order, it is the responsibility of the VENDOR and there shall be no change order to the CONTRACTOR/COMPANY.
19. Where blind flanges are specified, they shall be completed with bolts/nuts, gaskets and spares :
    - Gasket : 200% spares each size and type for blind flange nozzle and manhole
    - Bolt and Nuts : 10% spare or min 2 set (each set consist 2 nut and 1 bolt) whichever is higher for each blinded flange nozzle
20. The lifting lugs / trunnions and the attachment points to the pressure vessel shall be designed to a minimum load factors equal to 2.0 x lifted weight and shall be attached by full penetration welds.
21. VENDOR to submit ASME Code calculations, lifting calculation, transportation calculation and saddle design calculations for approval
22. VENDOR shall consider all loading data (including wind and seismic moment) for saddle support design.
23. VTA : Vendor to Advice , TBC = To be confirmed
24. Internal Painting & CP (Cathodic Protection) is required due to stagnant fluid condition (fluid carryover process fluid, condensing etc.).
25. Manhole to be supplied c/w hine, cover, gasket, and bolts